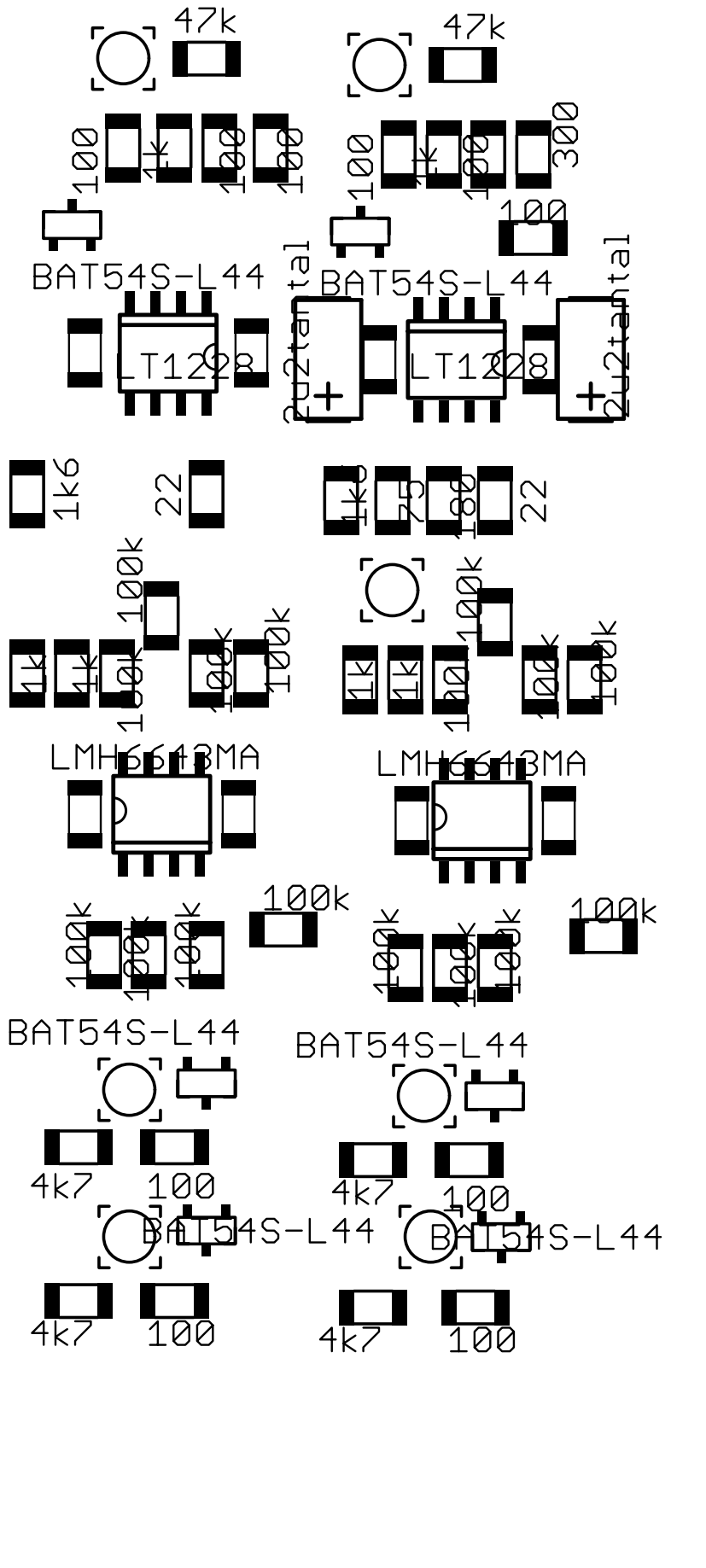
47k
47k
100
1k
100
100
100
1k
100
300
100
BAT54S-L44
BAT54S-L44
LT1228
LT1228
2u2tantal
2u2tantal
1k6
22
1k
75
180
22
100k
1k
1k
100k
100k
100k
1k
1k
100k
100k
100k
LMH6643MA
LMH6643MA
100k
100k
100k
100k
100k
100k
100k
100k
BAT54S-L44
BAT54S-L44
4k7
100
4k7
100
BAT54S-L44
BAT54S-L44
4k7
100
4k7
100